RANDOM_**ESSENTIA**
CORPO INCASSO
IN231

design AL STUDIO

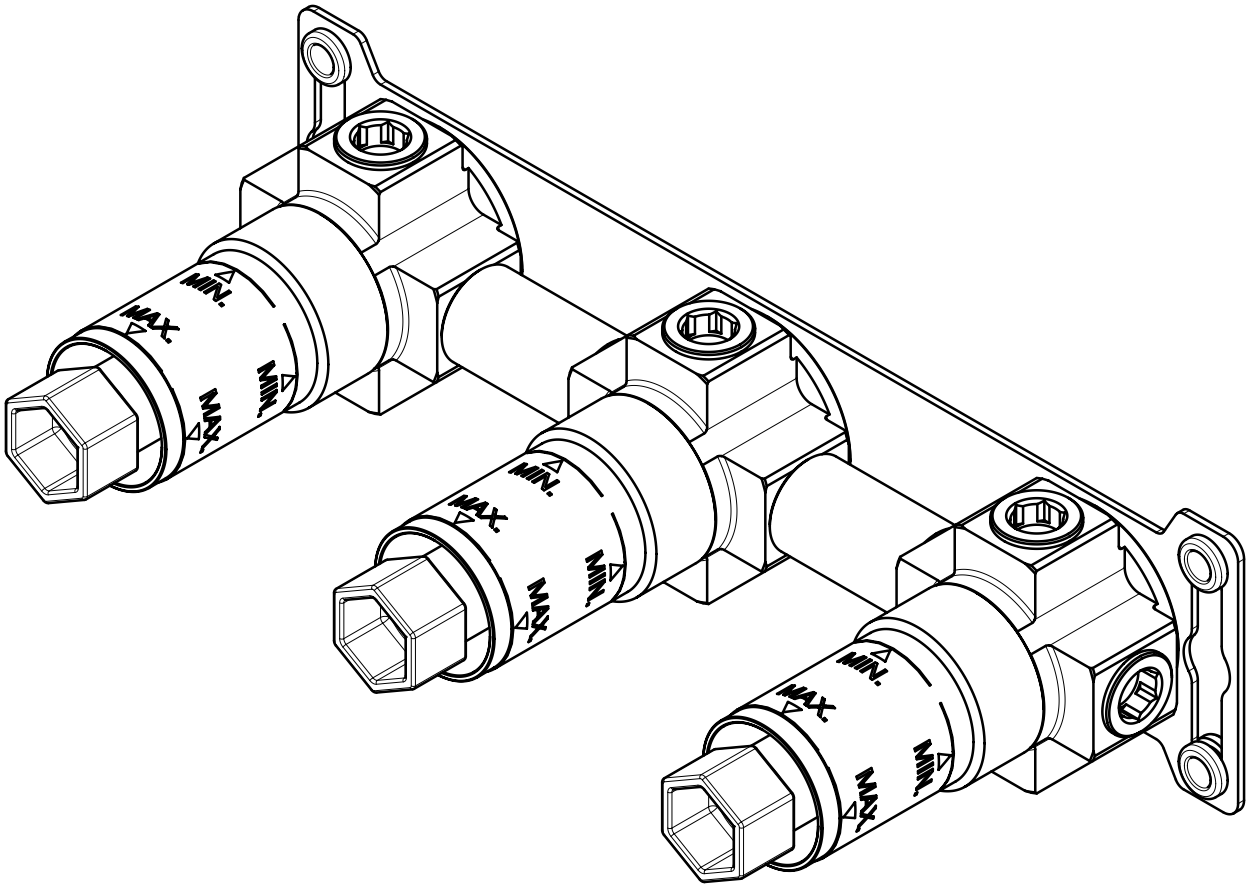

antoniolupi

MADE IN ITALY

IT_ISTRUZIONI PER CORPO AD INCASSO UNIVERSALE PER ART. RD230, RD231, RD232, RD233, RD240, RD241, RD242, RD243, RD230L, RD231L, RD232L, RD233L, RD240L, RD241L, RD242L, RD243L

EN_INSTRUCTIONS FOR UNIVERSAL CONCEALED VALVE FOR ART. ES200SA, ART. ES200LU, ART. ES201SA, ART. ES201LU, ART. ES202SA, ART. ES202LU, ART. ES203SA AND ART. ES203LU

FR_INSTRUCTIONS POUR CORPS D’ENCASTREMENT UNIVERSEL POUR ART. ES200SA, ART. ES200LU, ART. ES201SA, ART. ES201LU, ART. ES202SA, ART. ES202LU, ART. ES203SA ET ART. ES203LU

ES_INSTRUCCIONES PARA MECANISMO EMPOTRADO UNIVERSAL PARA ART. ES200SA, ART. ES200LU, ART. ES201SA, ART. ES201LU, ART. ES202SA, ART. ES202LU, ART. ES203SA Y ART. ES203LU

DE_ANLEITUNG FÜR UNIVERSAL-EINBAUKÖRPER FÜR ART.ES200SA, ART.ES200LU, ART. ES201SA, ART.ES201LU, ART.ES202SA, ART.ES202LU, ART. ES203SA UND ART. ES203LU

RU_ИНСТРУКЦИЯ ДЛЯ ВСТРАИВАЕМАЯ ЧАСТЬ УНИВЕРСАЛЬНАЯ ДЛЯ АРТ. ES200SA, АРТ. ES200LU, АРТ. ES201SA, АРТ. ES201LU, АРТ. ES202SA, АРТ. ES202LU, АРТ. ES203SA И АРТ. ES203LU



Art. IN231

IT_SMONTAGGIO E COMBINAZIONI_**EN**_DISMANTLING AND COMBINATIONS_**FR**_DÉMONTAGE ET COMBINAISONS_
ES_DESMONTAJE Y COMBINACIONES_**DE**_DEMONTAGE UND KOMBINATIONEN_**RU**_РАЗБОРКА И КОМБИНИРОВАНИЕ

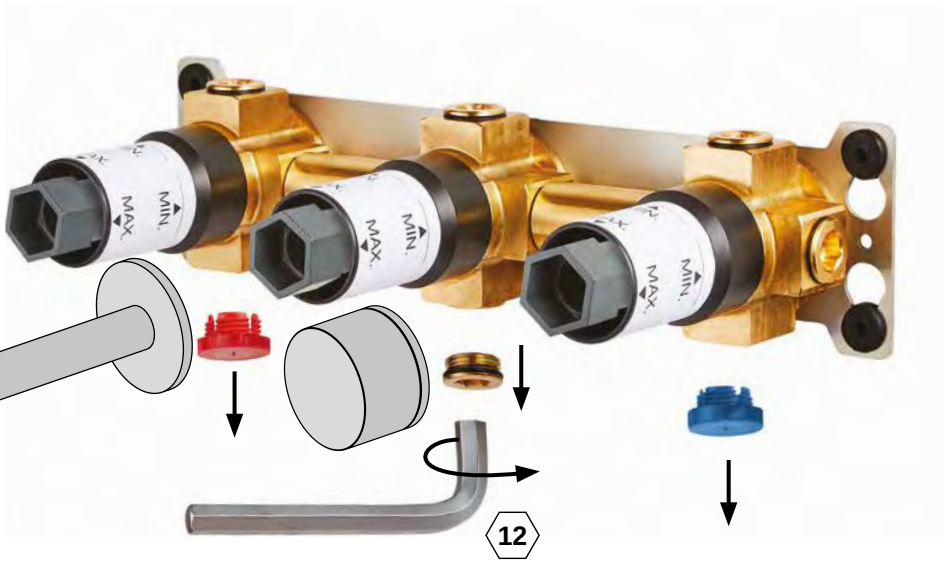

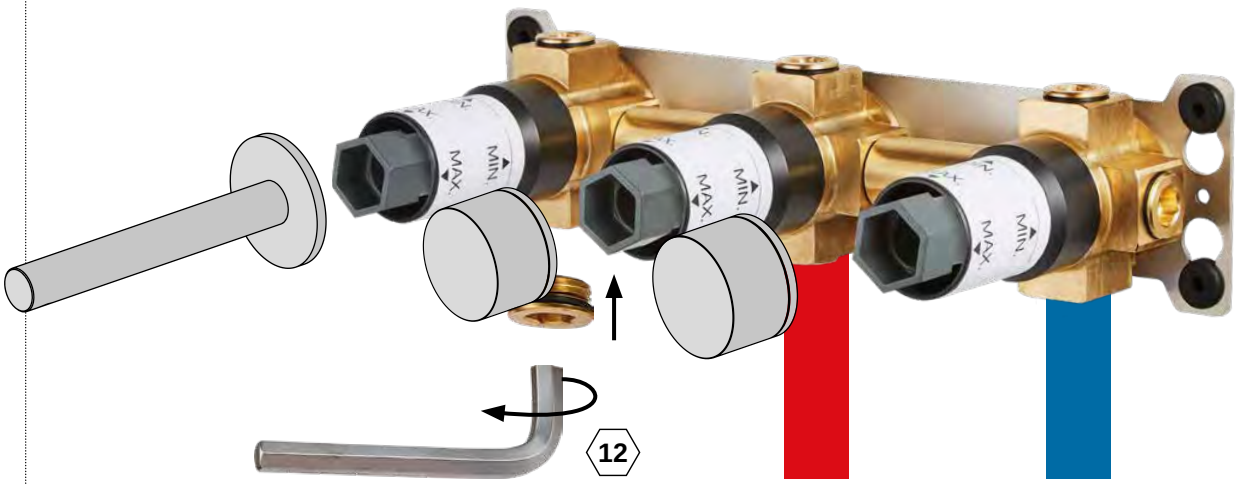

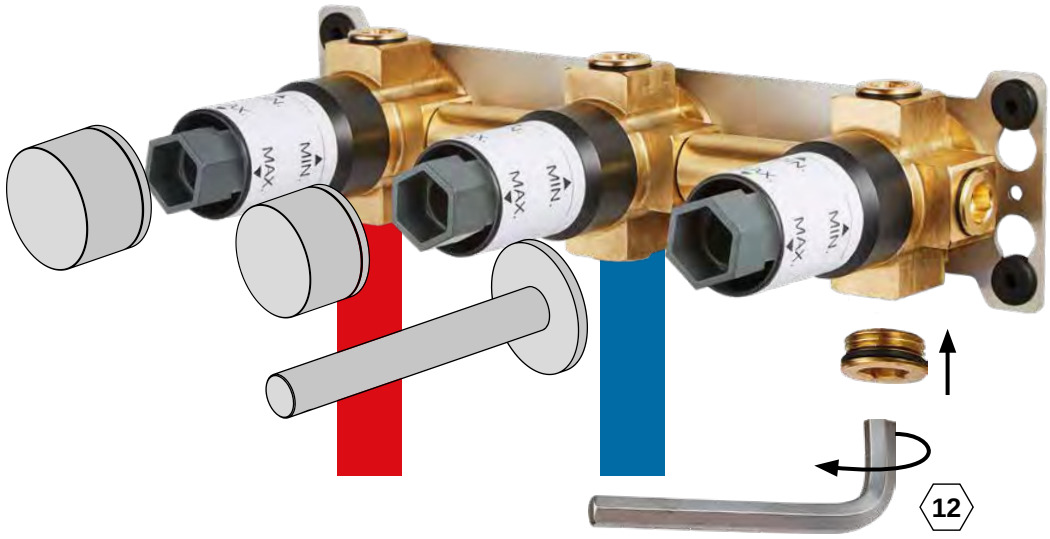

IT_INSTALLAZIONE_**EN**_INSTALLATION_**FR**_INSTALLATION_**ES**_INSTALACIÓN_**DE**_INSTALLATION_**RU**_МОНТАЖ

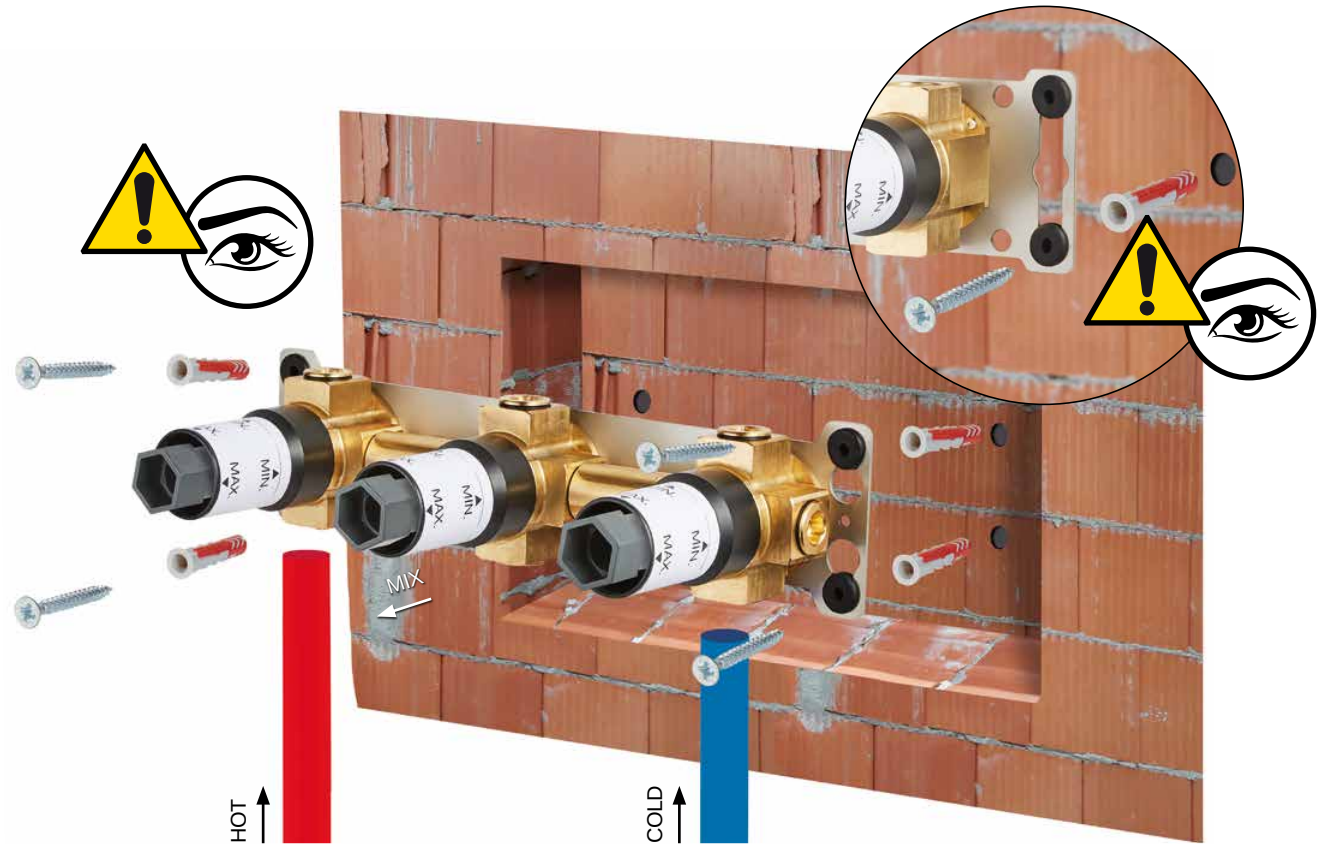

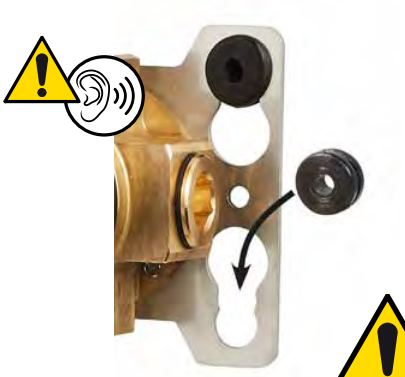

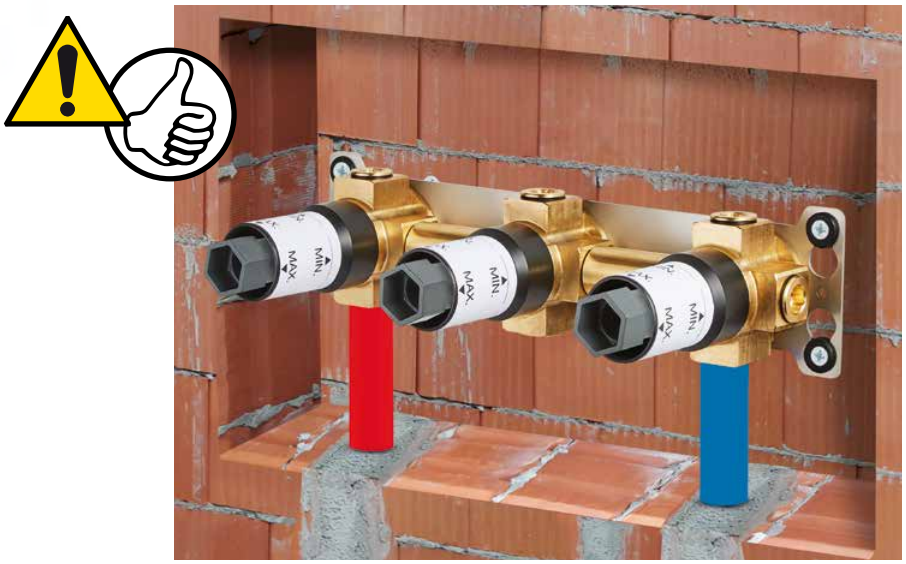

IT_PRIMA DI INIZIARE_**EN**_BEFORE STARTING_**FR**_AVANT DE COMMENCER_
ES_ANTES DE EMPEZAR_**DE**_VOR DER MONTAGE_**RU**_ДО НАЧАЛА

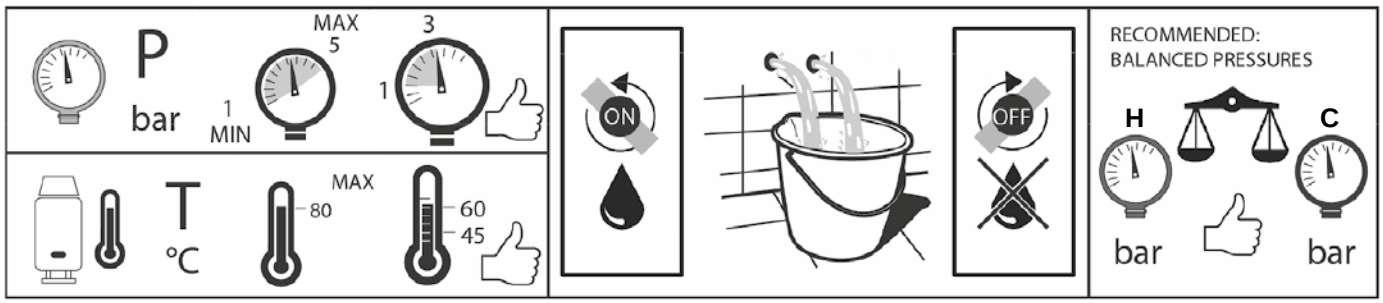

IT_PROVA CIRCUITO_**EN**_CIRCUIT TEST_**FR**_TEST DE CIRCUITS_**ES**_PRUEBA DE CIRCUITO_**DE**_DRUCK PRÜFUNG_**RU**_ИСПЫТАТЕЛЬНАЯ ЦЕПЬ

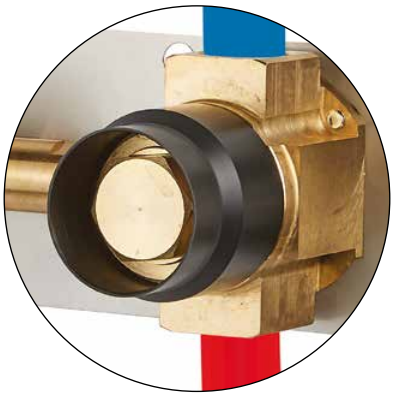

P 10 BAR



IT_PIASTRELLE_**EN**_TILES_**FR**_CARREAUX
ES_BALDOSAS_**DE**_FLIESEN_**RU**_ПЛИТКА

IT_GUAINA_**EN**_SHEATH_**FR**_GAINE
DE_DICHTMANSCHETTE_**ES**_VAINA_**RU**_ОБОЛОЧКА

IT_INTONACO_**EN**_PLASTER_**FR**_PLÂTRE
DE_VERPUTZ_**ES**_YESO_**RU**_ШТУКАТУРКА

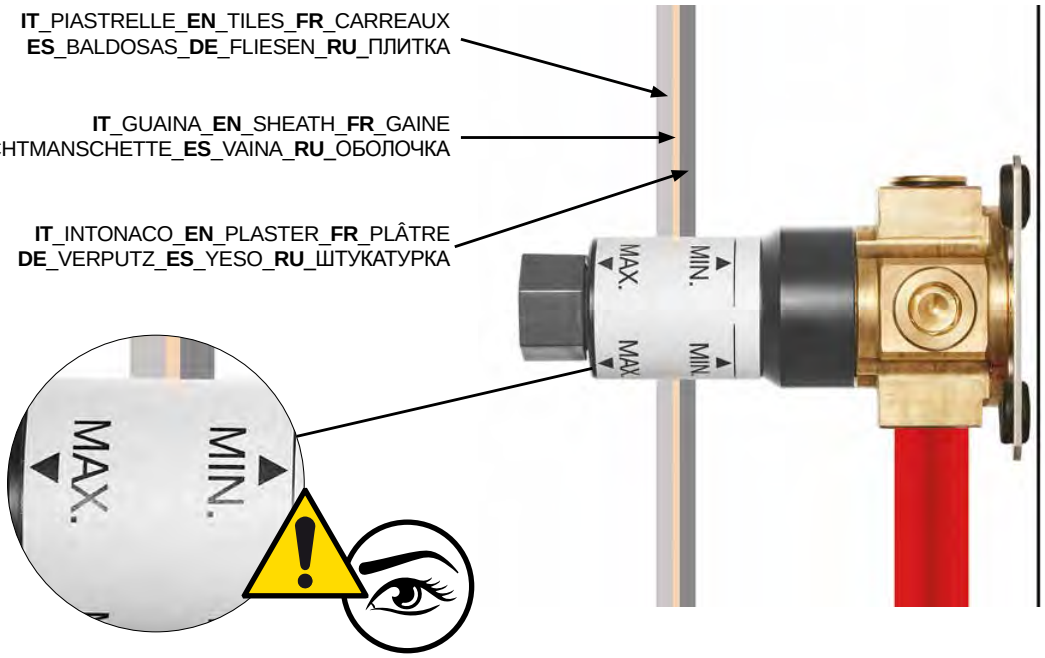

IT_INSTALLAZIONE_**EN**_INSTALLATION_**FR**_INSTALLATION_**ES**_INSTALACIÓN_**DE**_INSTALLATION_**RU**_МОНТАЖ



1



2



3

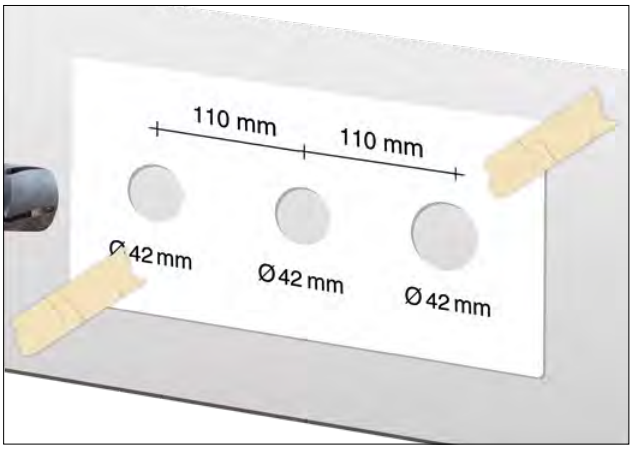

4



5



6

IT_DISEGNI DIMENSIONALI_EN_TECHNICAL DRAWING_**FR**_DIMENSION TECHNIQUES_
DE_MASSZEICHNUNGEN_**ES**_DIMENSIONES TÉCNICO_**RU**_ГАБАРИТНЫЕ ЧЕРТЕЖИ

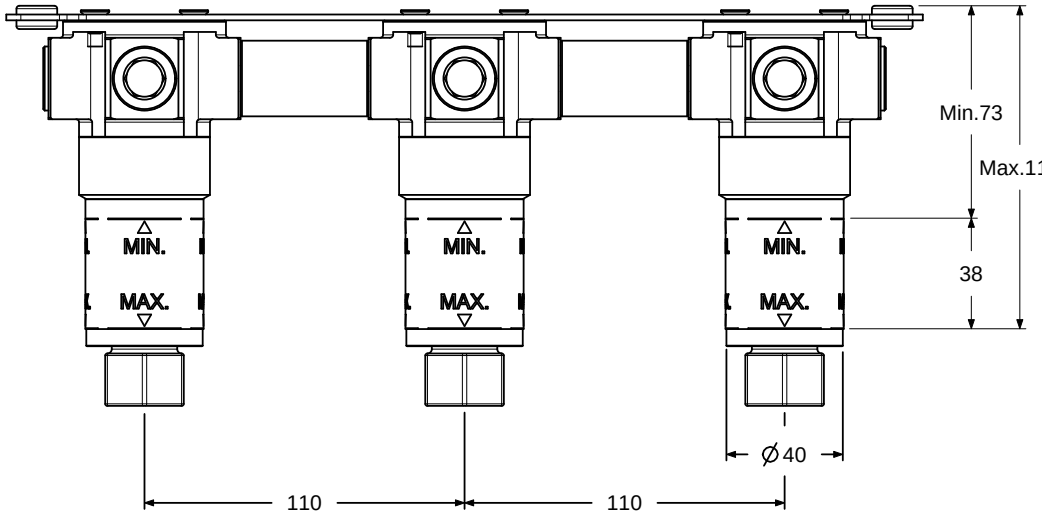

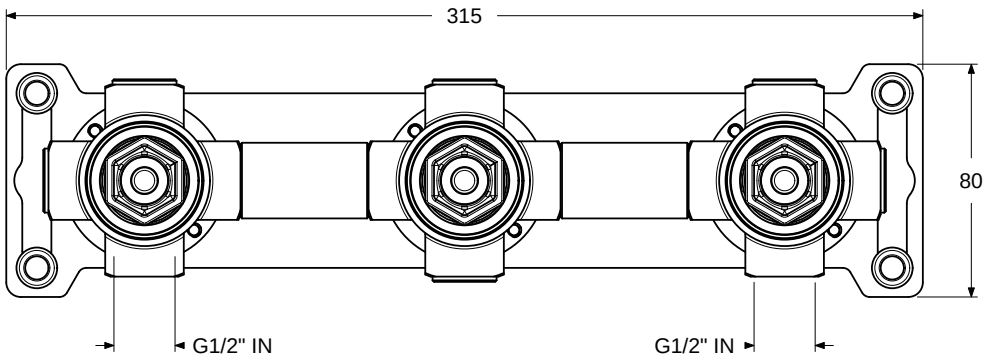

Art. IN231

IMPORTANTE
Per la pulizia consultare la scheda tecnica scaricabile dal nostro sito www.antoniolupi.it

IMPORTANT
For cleaning consult the technical data sheet downloadable from our website www.antoniolupi.it

IMPORTANT
Pour le nettoyage, veuillez vous référer à la fiche technique téléchargeable sur notre site www.antoniolupi.it

IMPORTANTE
Para la limpieza consultar la ficha técnica descargable de nuestro sitio web www.antoniolupi.it

WICHTIG
Für die Reinigung schauen Sie bitte das technische Datenblatt auf unserer Webseite herunterladbar www.antoniolupi.it

ВНИМАНИЕ!
Информацию по уходу за изделием вы найдете в технической схеме, которая доступна на нашем сайте www.antoniolupi.it

antoniolupi

73
VIA MAZZINI
75

Antonio Lupi Design S.p.A.
via Mazzini 73/75 - 50050 Stabbia
Cerreto Guidi (Firenze) - Italy
T +39 0571 586881_95651
www.antoniolupi.it
lupi@antoniolupi.it